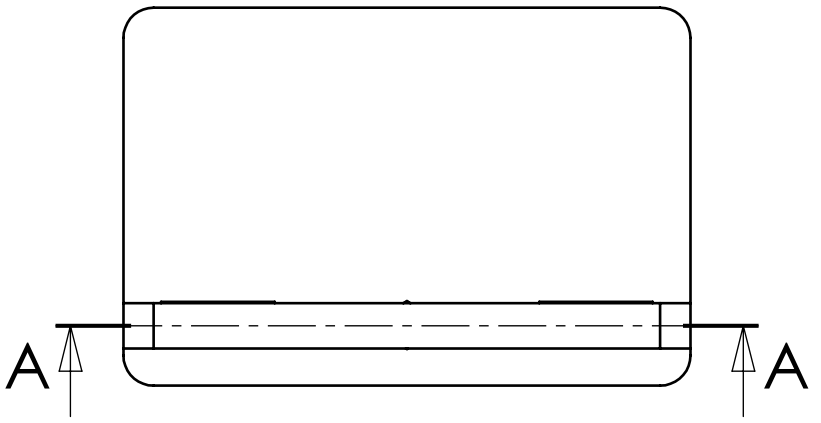

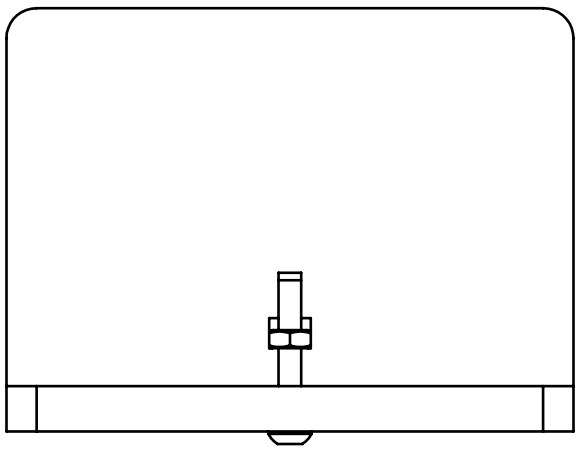

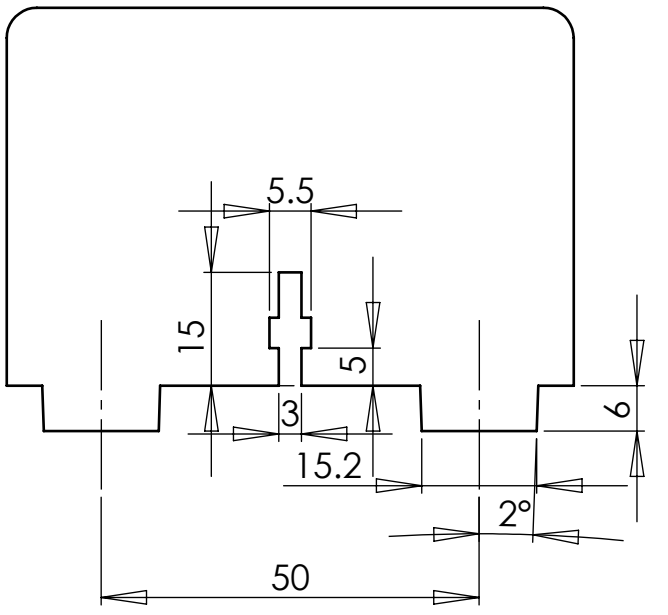

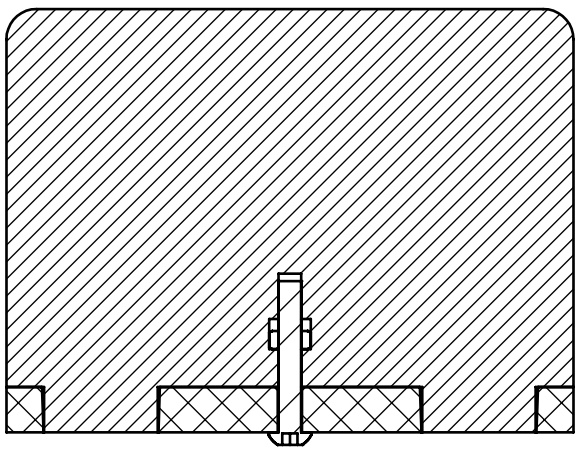

A-A

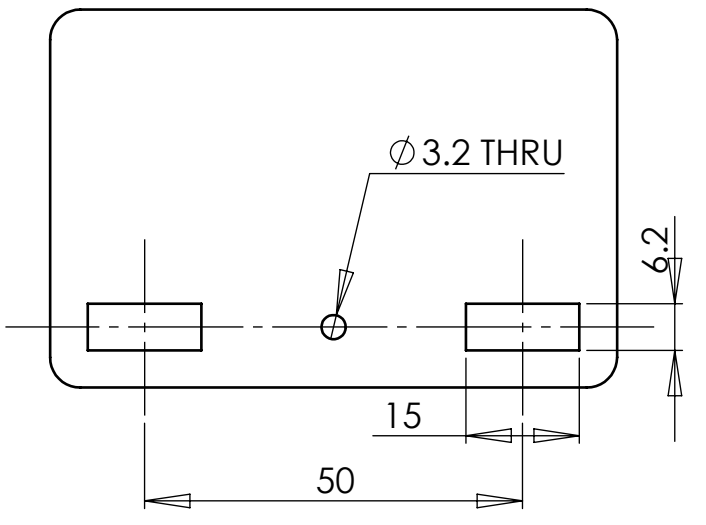

SOLIDWORKS Educational Product. For Instructional Use Only.