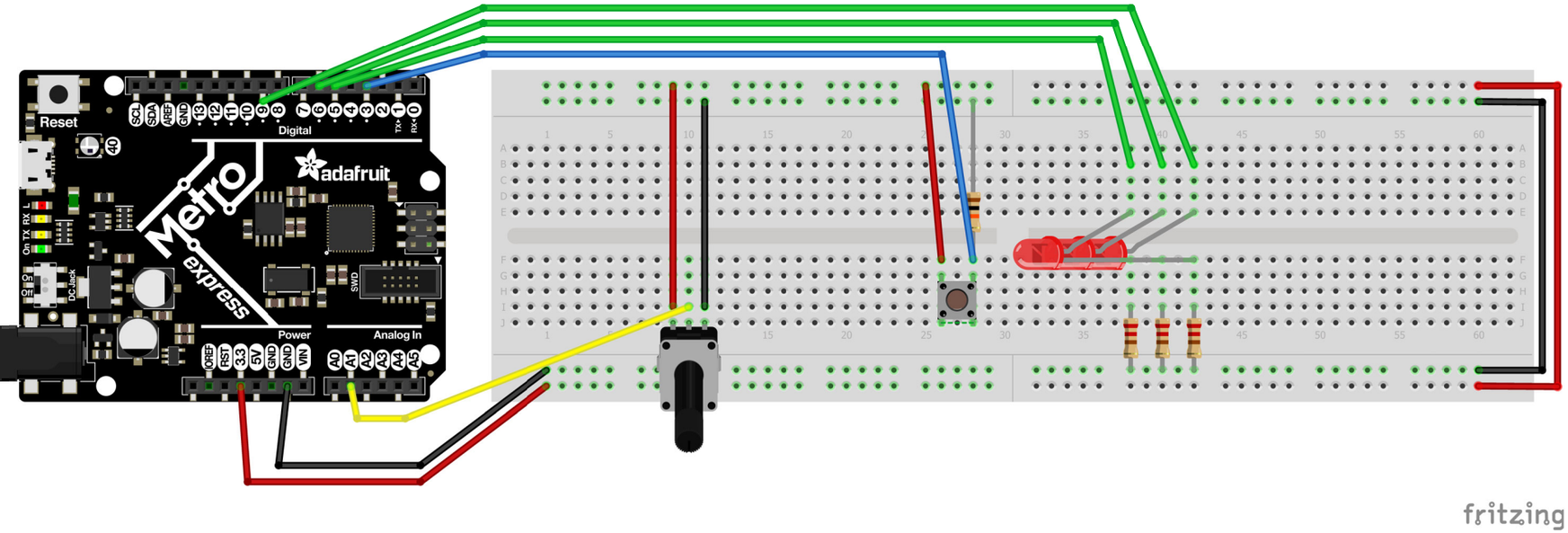
Reset
Digital
adafruit
Metro
express
Power
Analog In
fritzing